# 3. Wall Mounted (Type K3)

## 3-3. Dimensional Data

**Indoor Units: S-15MK3E, S-22MK3E, S-28MK3E, S-36MK3E, S-45MK3E**

unit: mm

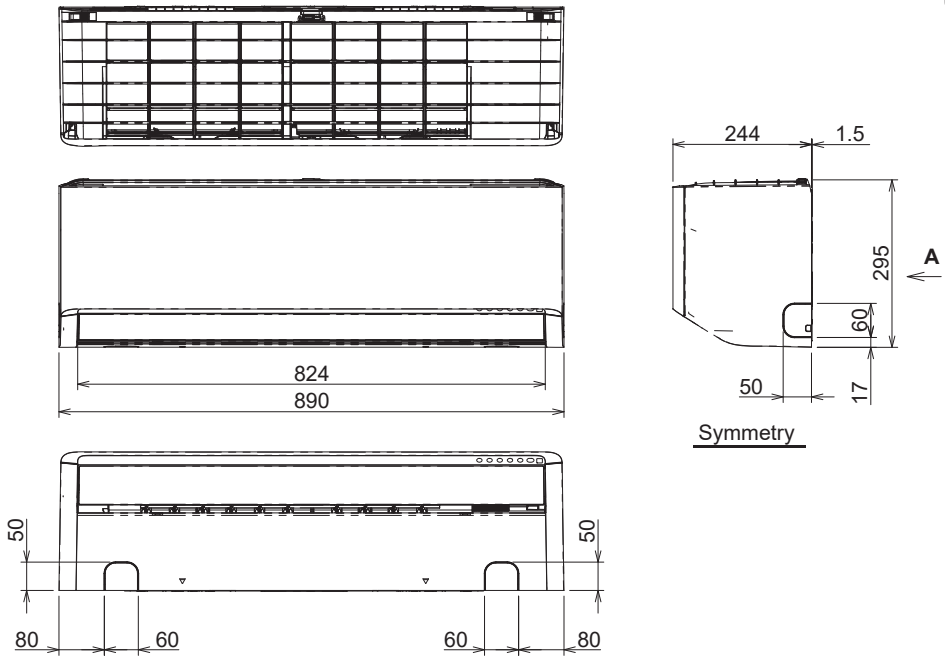


| | |
|---|---|
| ① | Refrigerant tubing (liquid tube) ø6.35 (flared) |
| ② | Refrigerant tubing (gas tube) ø12.7 (flared) |
| ③ | Drain hose |
| ④ | Rear panel |
| ⑤ | Rear panel fixing holes<br>(ø5.3 holes or as shown in figure "C") |
| ⑥ | Tubing and wiring holes (ø80) |

FILTER SIZE
(321.3×335×1.8)×2 pcs.

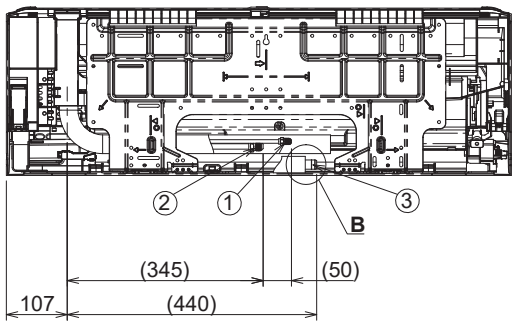


**VIEW A**

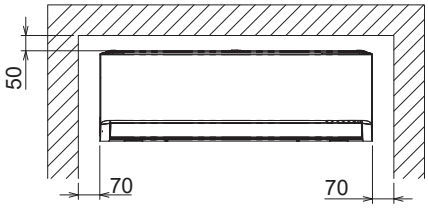


Minimum space requirements for installation

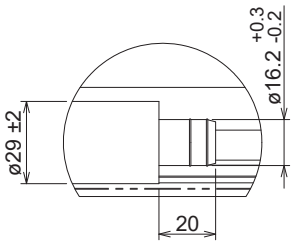


**Detailed view B**

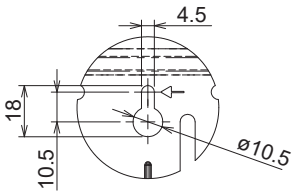


**Detailed view C**

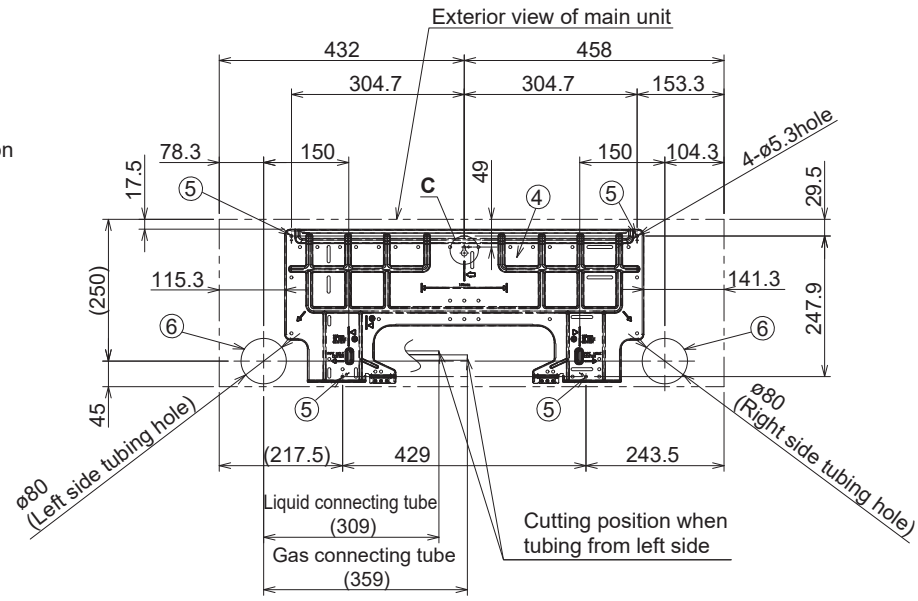

# 3. Wall Mounted (Type K3)

**Indoor Units: S-56MK3E, S-73MK3E, S-106MK3E**

unit: mm

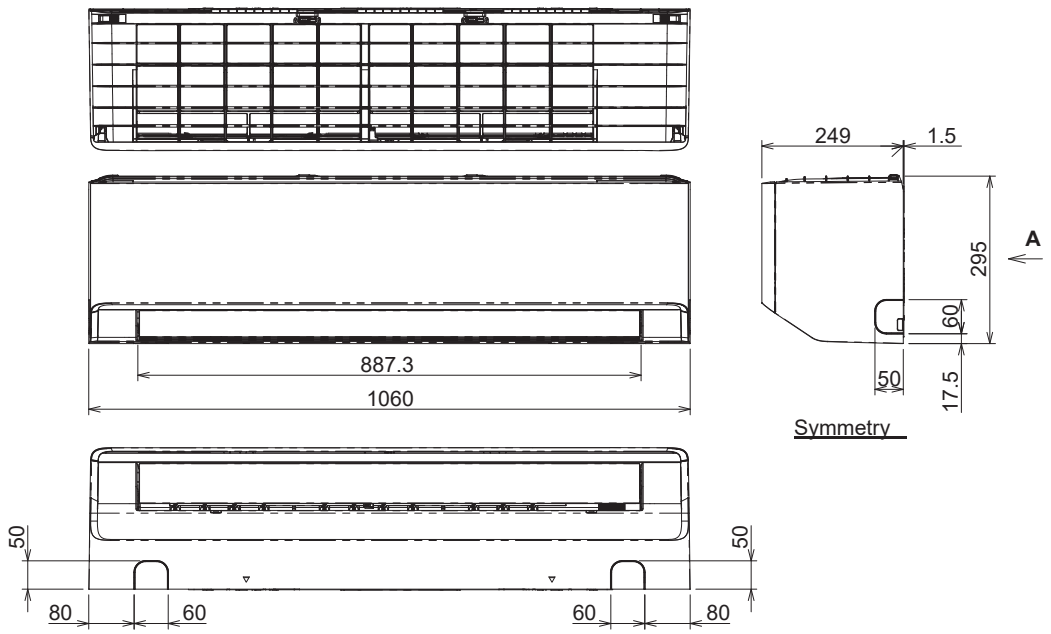


| | | | |
|---|---|---|---|
| ① | Refrigerant tubing (liquid tube) | Type 56 (R32/R410A) | ø6.35 (flared) |
| | | Type 73 (R32) | |
| | | Type 73 (R410A) | ø9.52 (flared) |
| | | Type 106 (R32/R410A) | |
| ② | Refrigerant tubing (gas tube) | Type 56 (R32/R410A) | ø12.7 (flared) |
| | | Type 73 (R32) | |
| | | Type 73 (R410A) | ø15.88 (flared) |
| | | Type 106 (R32/R410A) | |
| ③ | Drain hose | | |
| ④ | Rear panel | | |
| ⑤ | Rear panel fixing holes (ø5.3 holes or as shown in figure "C") | | |
| ⑥ | Tubing and wiring holes (ø80) | | |

FILTER SIZE
(406×344×1.8)×2 pcs.

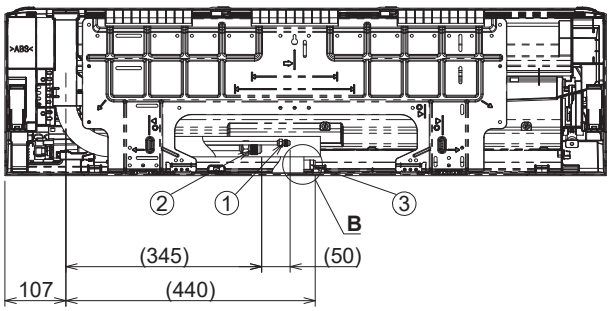


**VIEW A**

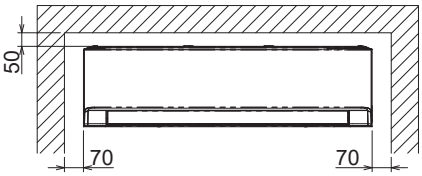


Minimum space requirements for installation

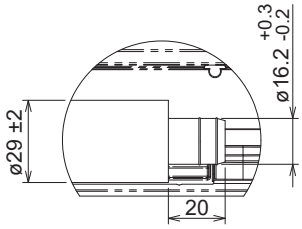


**Detailed view B**

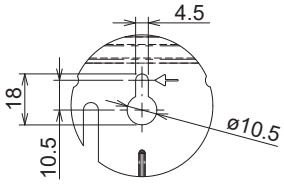

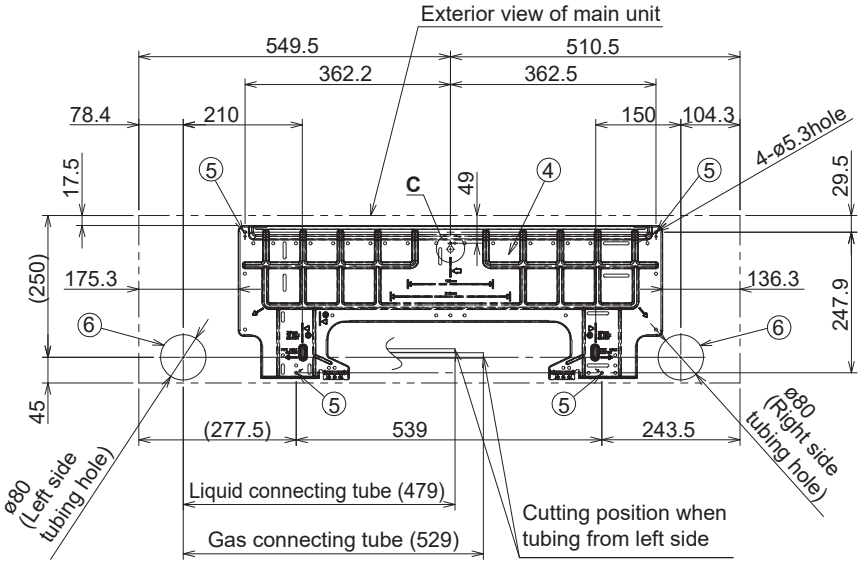
**Detailed view C**